TEKCELEO

HIGH PERFORMANCE AEROSOL GENERATORS AND NEBULIZERS

CATALOG 2022/2023 –MICRONICE® P&S AEROSOL GENERATOR RANGE

TEKCELEO
We Accelerate Innovation

1. Table of contents

1. Table of contents 2
2. About Tekceleo 4
3. Our solutions 5
4. Micronice® Aerosol Generator working principles 6
   4.1. Mechanical principles 6
   4.2. Control principles 6
5. P&S 360 SERIES 7
   5.1. Features 7
   5.2. Use cases and applications 8
      5.2.1. Industrial processes 8
      5.2.2. Decontamination 9
      5.2.3. Humidification 10
   5.3. Standard dimensions 11
   5.4. Specifications 11
      5.4.1. Output 11
      5.4.2. Inputs 12
      5.4.3. General characteristics 12
   5.5. P&S 360 fully functional kit 12
      5.5.1. Introduction 12
      5.5.2. Items included 13
      5.5.3. Overview 13
   5.6. Schematics on set-up possibilities 14
      5.6.1. Closed fluidic system with a pump 14
      5.6.2. Linear circuit with a drain 14
6. P&S T45 SERIES 15
   6.1. Features 15
   6.2. Use cases and applications 16
      6.2.1. Aerosol and particles studies 16
      6.2.2. Aerosol sampling and calibration 17
      6.2.3. Filter testing 18
   6.3. Standard dimensions 19
   6.4. Specifications 19
      6.4.1. Output 19
      6.4.2. Inputs 20

6.4.3. General characteristics 20
6.5. P&S T45 fully functional kit 20
6.5.1. Items included 21
7. Electronic controllers 22
7.1. Features 22
7.2. Specifications 22
8. Customization and on-demand parts 23
8.1. Available customization 23
8.1.1. Droplet size 23
8.1.2. Temperature range 24
8.1.3. Other 24
8.2. Cables matrix 24
8.3. Accessories 25
8.3.1. HMI 25
8.3.2. Pump and ECU pump 26
8.3.3. Other 26

2. About Tekceleo

Tekceleo is a French manufacturer of piezoelectric actuators of high quality. Our know-how is based on more than 20 years of works and manufacturing in piezoelectrics mechatronics devices.

We are known for our ability to provide creative and practical solutions focused on our client use cases. Our offer focuses on two product lines: Micronice® for aerosol generation actuator and Wavelling® for ultrasonic motors.

Tekceleo's main market are pharmaceutical, medical, automation, measurement and aerospace industries. All our operations (design, manufacturing and marketing) are ISO 9001 certified. All our product are produced in our own facility in Mougins, South of France.

Our company is composed of a multidisciplinary team of engineers and physicists who have all the necessary tools to integrate the different technologies composing a product : mechanics, plastics, thermics, electronics and embedded software.

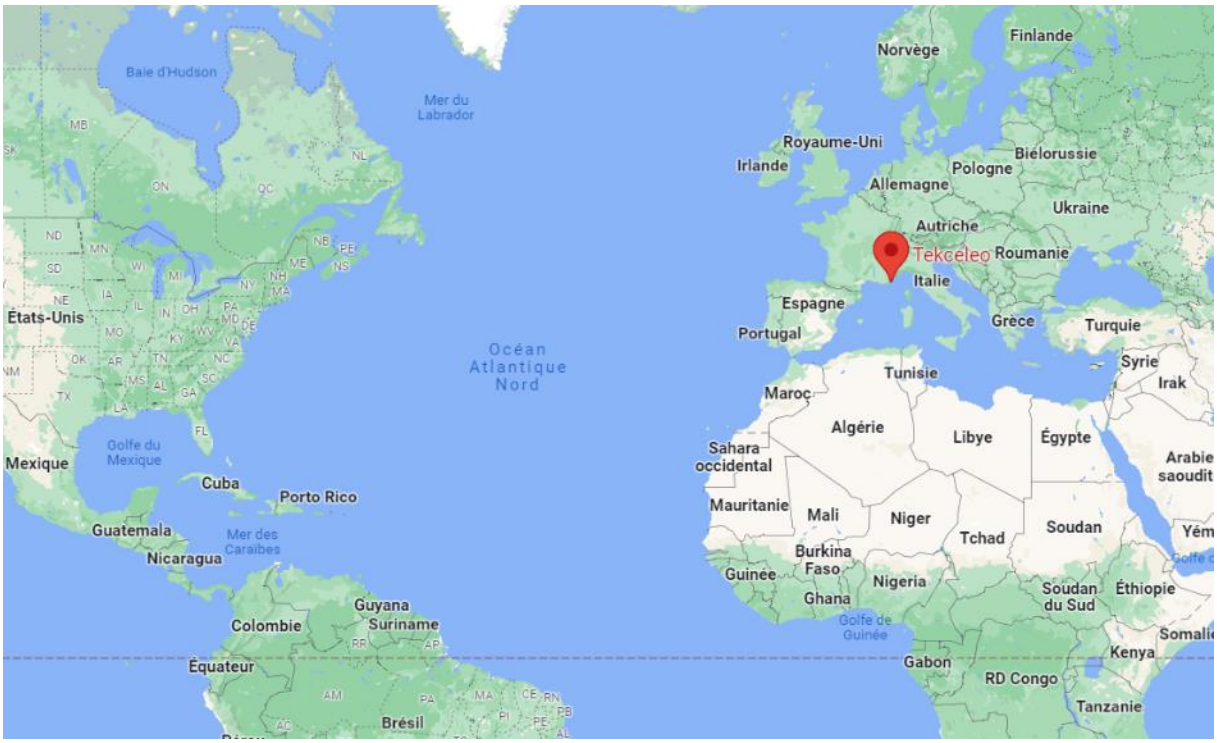

3. Our solutions

MANUFACTURING

Tekceleo brings its craftmanship and know-how in manufacturing best of the line piezo actuators. Our flexible manufacturing line allows customization and high reactivity.

ENGINEERING

We offer more than 20 years of experience in innovation. Each customer has different project, expectations and goals. We can adjust our solution to fit your design. Our team of engineer brings support and consulting to add value to your project.

PARTNERSHIP AND INTEGRATION

Tekceleo is here to help you get started with our technology. We help you throughout your integration process with our engineering team as a partner. We ensure confidentiality and support to our customer. We can also work as system integrators and technology consultants if needed.

SUPPORT FROM EVALUATION TO PRODUCTION

Our value proposition is based on a complete support for our customers and partners in their industrialization process : design, prototyping, characterization, production and optimization. We help you to get through all your innovation cycle.

4. Micronice® Aerosol Generator working principles

4.1. Mechanical principles

The TEKCELEO patented MICRONICE® technology is a breakthrough spray technology based on a low power amplified piezoelectric effect.

Thanks to the expertise of our team, we have developed a micro-perforated mesh device which, when vibrating at a certain frequency, expels the liquid as fine droplets perfectly calibrated (monodispersed).

Using the physical property of this principle, our technology allows to create calibrated aerosol. The fact that no heating, pressure or electricity is involved also preserve the liquid that is aerosolized. This is a key advantage when it comes to bioaerosol generation or for precise processes.

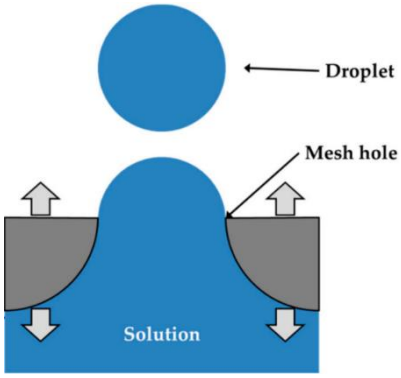

4.2. Control principles

Our amplified vibrating mesh technology work on two parameters :

- Tension
- Frequency

Our controllers are made to generate these parameters to always ensure that the membrane displacement reach the right operating point. Our controllers ensure good flowrate without risking to put the membrane in a resonance disaster scenario.

The fact that this control is at ultrasonic frequency allows to directly control the spray flowrate with a duty cycle. Our controller can easily handle PWM control to set the flowrate. As a result, we are able to control flowrate of the nozzle with a great linearity, even with very small flowrate.

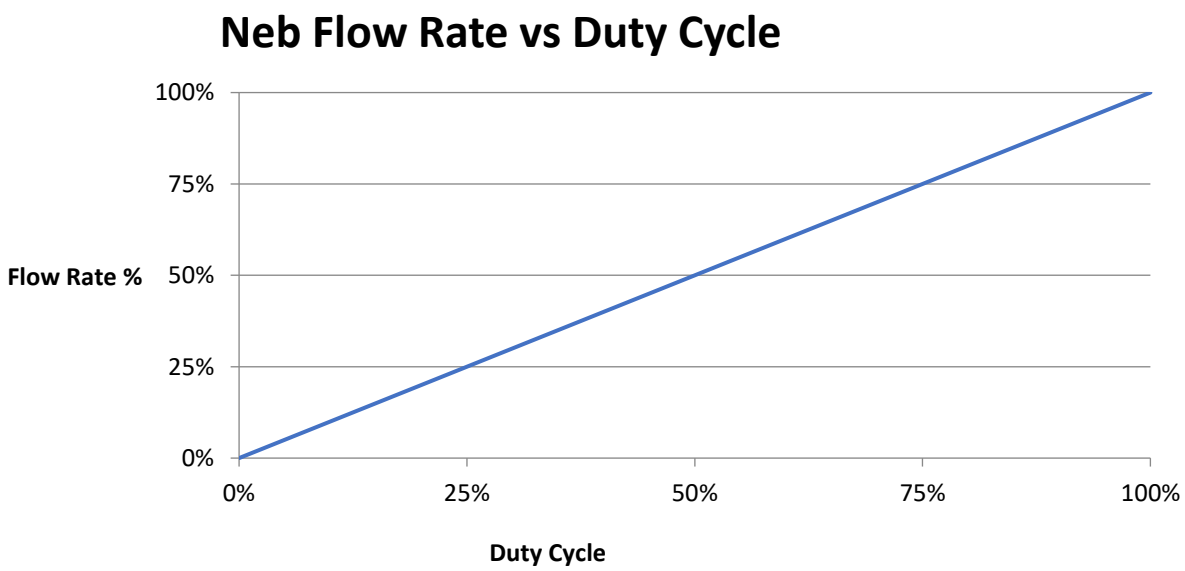

5. P&S 360 SERIES

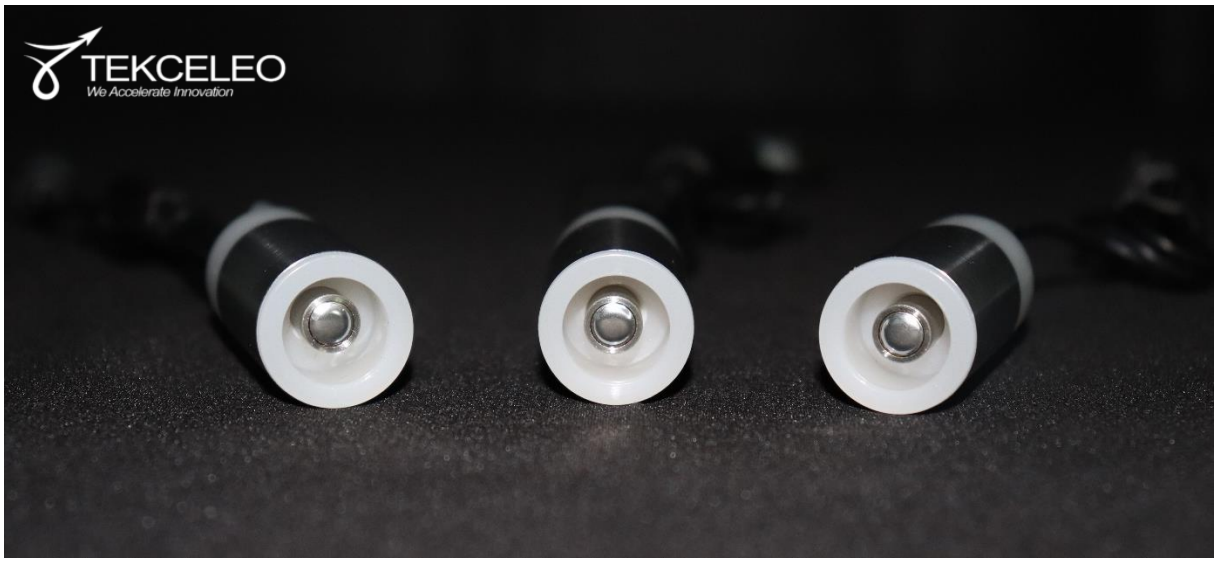

5.1. Features

The P&S 360 series has various features making it suitable for a wide variety of use cases :

- **Very low footprint ;**
- **Easy to use**, as it is a “plug and spray” device ;
- Easy to mount and integrate to every volume or place where it is needed. Electronics can be deported.
- **Adaptable flowrate and droplet size**, allowing for a large variety of uses ;
- Circulating fluidic system functioning on closed loop or with drain ;
- **Very low power consumption** (< 2W per nozzle) ;
- **No noise** during operation ;
- **No heating** nor pressure rise during operation ;
- Very easy to control via electronics (PLC, HMI, etc.) ;
- **Can support corrosive liquid and high temperature of operation.**

P&S 360 design is well suited for most automated industrial use cases, from humidity control, generation of industrial aerosol or decontamination of volume.

Our P&S 360 nozzles come with 5 standard droplet size : 05 µm, 08 µm, 12 µm, 20 µm and 50 µm. More information regarding our standard nozzles in the Specifications section of the catalog.

5.2. Use cases and applications

5.2.1. Industrial processes

The Micronice® nebulization technology, patented by TEKCELEO, **is used in a wide range of industrial processes requiring the precise generation of aerosols** or sprays. At the heart of challenging processes, our technology **is easily integrated thanks to its electronic control via software and its response time of less than a millisecond**. Thus, our spray heads can easily be implemented in an industrial chain for any type of process:

- Coating ;
- Thin films ;
- Creation of micro-spheres and capsules ;
- Pharmaceutical Spray drying (dry powder generation) ;
- Additive manufacturing.

Each application can benefits from our calibrated aerosol generation, which allows to perfectly master the aerosolization process.

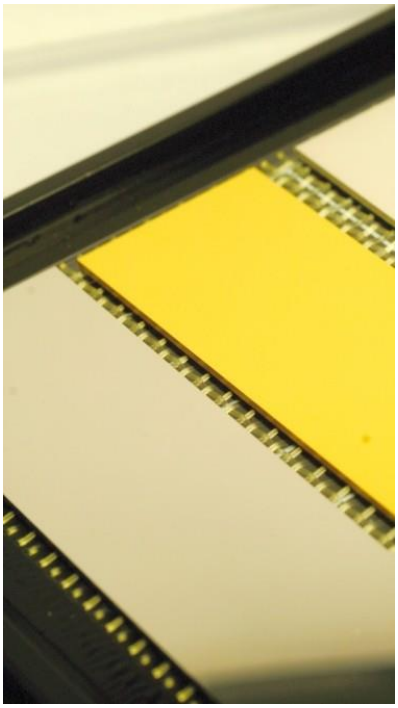

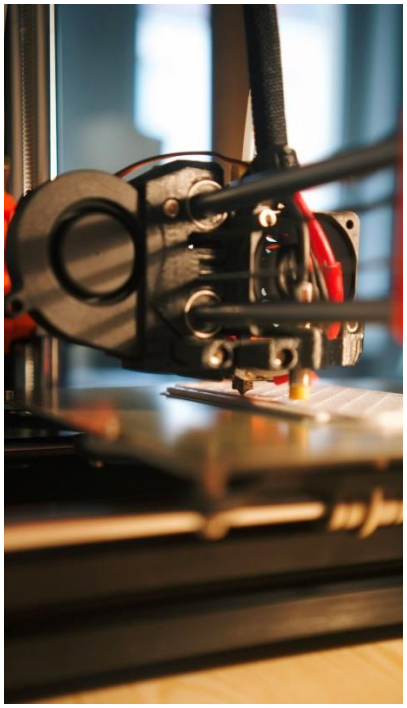

5.2.2. Decontamination

Our technology is suitable for multiple sterilization and decontamination use cases: **it works both with Hydrogen Peroxide and Peracetic Acid, using cold-temperature nebulization.** Our nozzles are made to be easily integrated in all equipment, regardless of the sector. **In the right configuration they achieve the EN 17-272 norm for airborne disinfection, which means reaching log 4 to 6 for bacteria, viruses and fungi.**

Right now, our technology is integrated in many automated decontamination devices such as :

- **Portable automated H2O2** (hydrogen peroxide) **decontamination foggers** ;
- **Isolators**, as integrated hydrogen peroxide sprayers ;
- **Biological Safety Cabinet** (BSC), as integrated hydrogen peroxide sprayers ;
- **Airlock**, as integrated hydrogen peroxide foggers ;
- **Asceptic packaging machine for food industries,** as integrated hydrogen peroxide foggers.

Our technology is very appreciated in **H2O2 decontamination for small or medium sized volume.** Indeed, our ability to produce very small droplet (05 µm) allows for same efficiency as VHP (vaporized hydrogen peroxide) devices but without the disadvantages. Indeed, our system remain small, easy to integrate and allows for short decontamination cycles (between 15mn to 1h).

5.2.3. Humidification

Tekceleo's Plug & Spray humidification products can be used as humidifiers for various processes :

- **Food processing applications**. It can preserve food over time by humidifying it without wetting surfaces.
- **Aeroponics controlled environment**. P&S 360 can either maintain the right relative humidity or be used as a sprayer for feeding roots of the plants.
- **Automated and localized humidification for processes**. For example, adhesive activation, or treatment of surfaces.
- **Controlled environment humidifiers**, with their very precise and easily controlled flowrate our nozzle can control relative humidity for special processes in food, pharma or chemical industries.

Use of Tekceleo's nebulizers for precise humidification allows to **save space, consumables and energy**. The very short fluidic response time of our nozzle couple to a very controlled flowrate and droplet size makes it a solution for a wide variety of humidification use case.

5.3. Standard dimensions

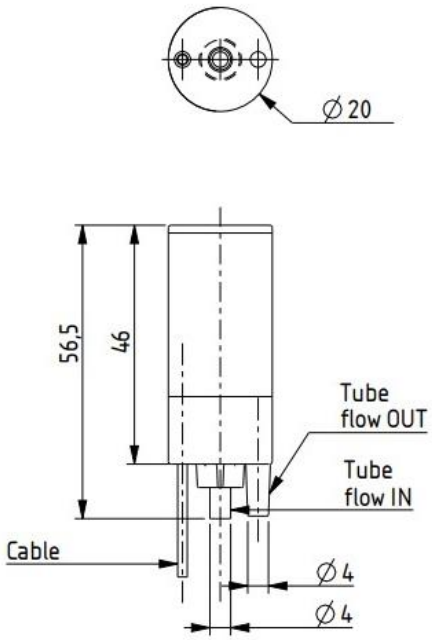

Nozzle dimension

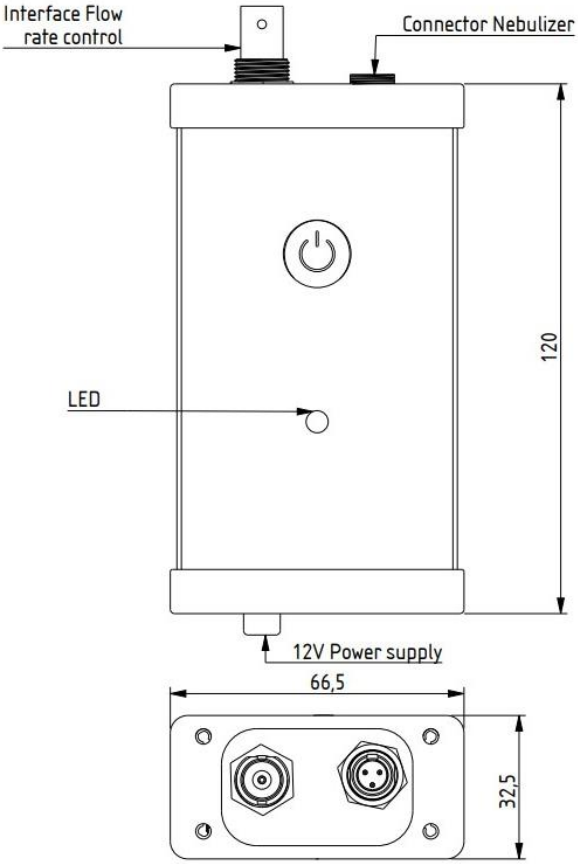

Electronic controller dimension

5.4. Specifications

5.4.1. Output

Nozzle ref	Droplet size	Max output per nozzle (ml/min) – RO water	Max output per nozzle (L/h) – RO water	Max nozzles per controller (simultaneous control)	Max output per controller/nozzles set-up
H360 – M05	05 µm	0,8 ml.mn	0,05 L.h	10 nozzles	0,5 L.h
H360 – M08	08 µm	2,5 ml.mn	0,15 L.h		1,5 L.h
H360 – M12	12 µm	4,3 ml.mn	0,26 L.h		2,6 L.h
H360 – M20	20 µm	8 ml.mn	0,5 L.h		5 L.h
H360 – M50	50 µm	35 ml.mn	2 L.h		20 L.h

5.4.2. Inputs

Nozzle ref	Power supply	Power consumption	Water supply system	Water supply max pressure	Control system
H360 – M05	12 VDC – 60cm standard cable length	< 160 mA per nozzle	Circulating fluidic system with I/O plug for tubing	<0,1 bar Working on circulating fluidic system	12 VDC power supply (adapters compatible to 110 and 220 V power supply) PWM interface (3.3V) on BNC connector
H360 – M08					
H360 – M12					
H360 – M20					
H360 – M50					

5.4.3. General characteristics

Nozzle ref	Weight (cabled nozzle)	Nozzle materials	System tubing	Temperature range	Average lifespan under normal condition of use
H360 – M05	35 g	SS304, SS316 and HDPE	Ø 3mmx5mm nozzle feeding silicone tubes	-20°C to 80 °C Work only on liquid	10 000 hours *Lifespan may vary depending on liquid and condition of uses*
H360 – M08					
H360 – M12					
H360 – M20					
H360 – M50					

5.5. P&S 360 fully functional kit

5.5.1. Introduction

In order to easily use directly our Micronice technology, **we provide a fully functional kit**. Main purpose of this kit is to start prototyping and playing with our aerosol generation technology to get started.

However, these kits are also fully functional devices that **can be directly use for all applicable use cases : decontamination (H2O2 fogging), humidification or even industrial processes.**

Kit can be purchased at any time and for any droplet size or configuration needed. **Just contact us on our website www.tekceleo.com.**

5.5.2. Items included

<u>List of items included in the P&S 360 kit</u>

The P&S 360 functional kit includes :

- One nozzle and a tripod to mount it.
- One controller.
- One HMI to easily get started (touch-screen displayer for easy control). It allows to ON/OFF, set flowrate and duty cycle.
- One fully functional fluidic system : pump, pump's controller, reservoir and tubing.
- All needed cables.

5.5.3. Overview

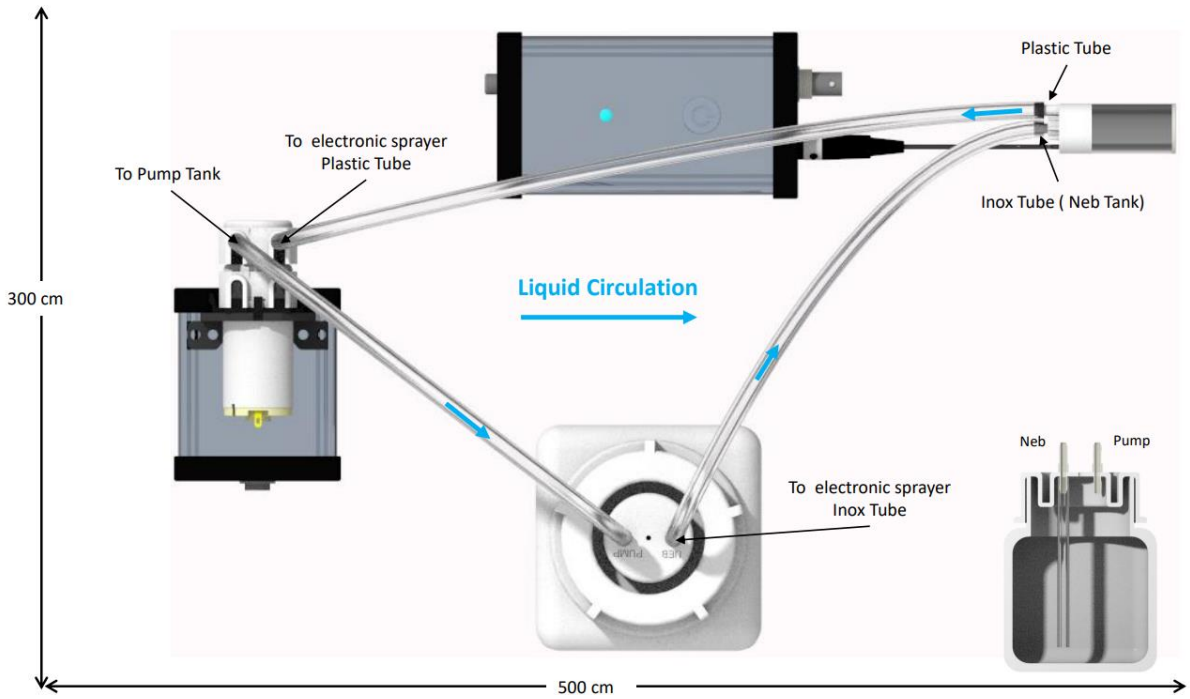

5.6. Schematics on set-up possibilities

5.6.1. Closed fluidic system with a pump

This set up is ideal **for industrial processes that requires precision on aerosol flowrate generation**, as well as wasting as little liquid as possible during operation.

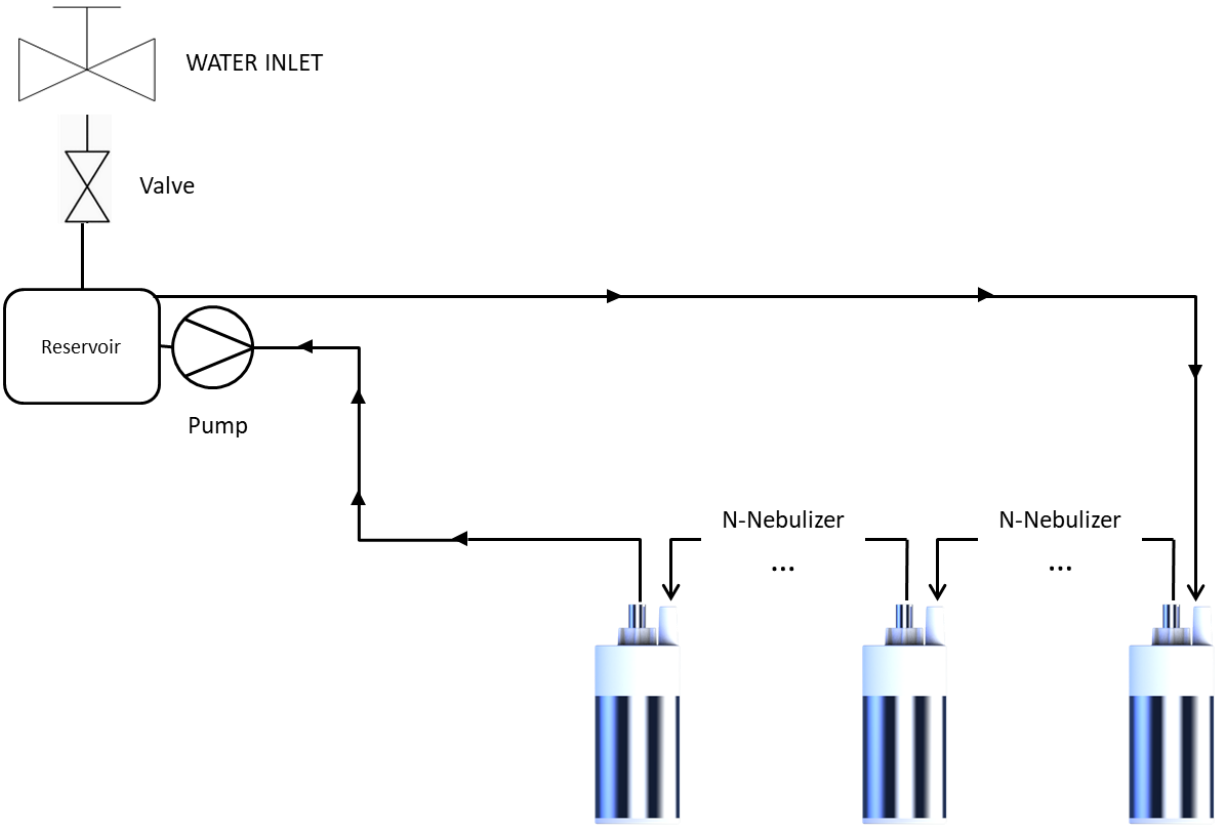

5.6.2. Linear circuit with a drain

This set up is convenient for **simple humidification set ups**. It avoids the need to deal with stagnant water and allows for easy installation of nozzles in operation.

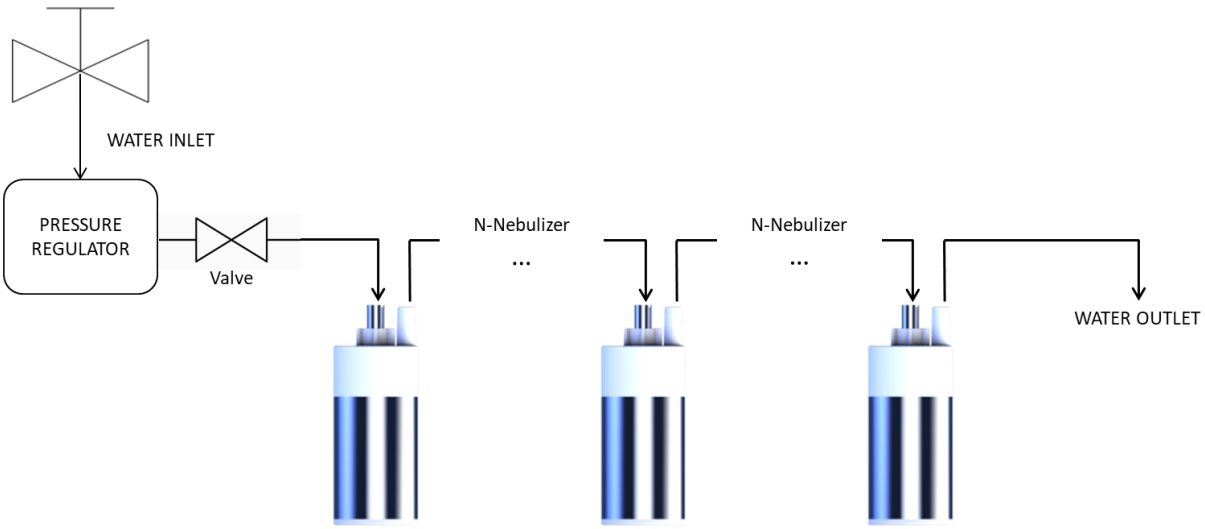

6. P&S T45 SERIES

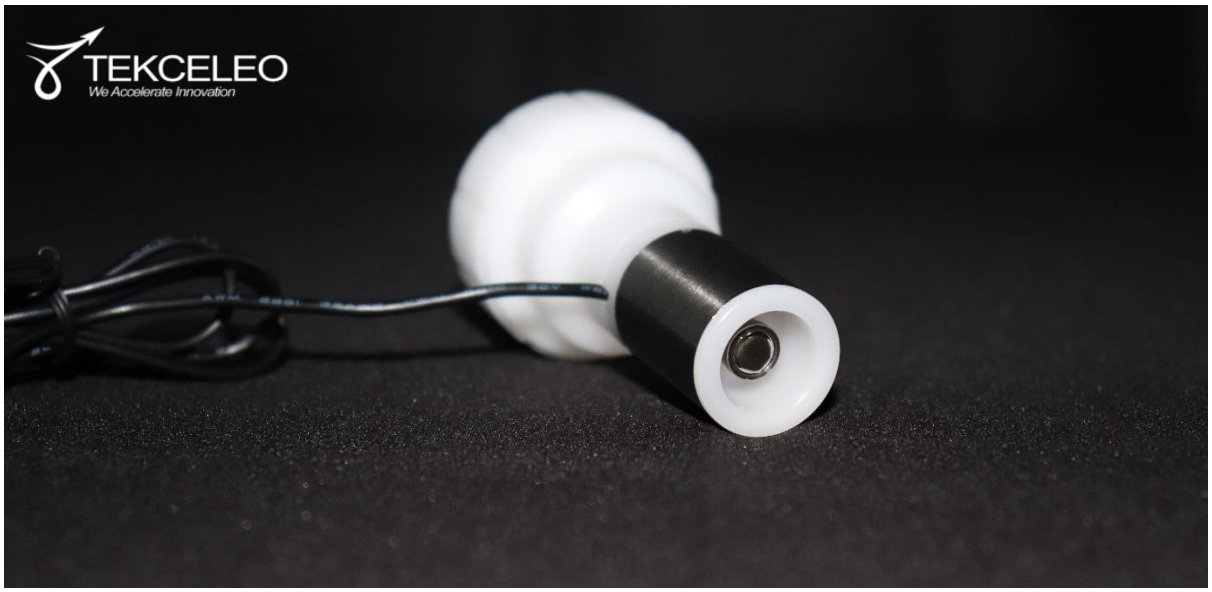

6.1. Features

The P&S T45 series has various features making it suitable for a wide variety of use cases :

- Very low footprint ;
- Easy to use, as it is a “plug and spray” device ;
- **Easy to handle : easy to fill and clean 10 mL integrated tank.**
- Ergonomic design to handle and fix it anywhere needed.
- **Adaptable flowrate and droplet size**, allowing for a large variety of uses ;
- **No dead volume**, can be use with very precise or valuable liquid sample ;
- No noise during operation ;
- **No heating nor pressure rise during operation** ;
- Very easy to control via electronics (PLC, HMI, etc.) ;
- **Can support corrosive liquid and high temperature of operation.**

P&S T45 design is well suited for most laboratory research, R&D aerosol testing, precise sample aerosolization. It is design to be easy to test, experiment and play with various variable around aerosol generation.

The P&S T45 is available in a Very High Temperature range that can operate up to +200 °C.

6.2. Use cases and applications

6.2.1. Aerosol and particles studies

Tekceleo's Micronice nebulization technology is commonly used for precise atomization of relatively low viscosity liquids (viscosity < 3mPa s). Our droplet generators are based on the concept of vibrating mesh nebulization, **which atomizes the liquid without increasing temperature or pressure**. In addition, our simple and modular design, a simple kit, **is perfectly adaptable to any research environment.**

Our devices can guarantee monodispersed aerosol particles and no alteration of the atomized solutions, which is particularly appreciated in the context of aerosolization of pharmaceutical and biologic formulations. Among our customers, the most common laboratory uses for our scientific atomization solution are:

- **Microbiology** (microorganisms, fungi, etc.) ;
- Medical research (bacteria, viruses, pollen…) ;
- **In-vitro testing ;**
- Thermal and material study (Coating, nuclear studies…) ;
- Study of aerosol behaviour (airflow mapping, etc.).

6.2.2. Aerosol sampling and calibration

T45 design is perfectly suited for precise sampling of aerosol and for calibration of devices. The “Plug & Spray” design allows to produce a wide range of calibrated droplet :

- 05 µm
- 08 µm
- 12 µm
- 17 µm
- 20 µm
- 50 µm

From 04 µm to 100 µm, we can custom the membrane of our nozzles to precisely calibrate the aerosol you need. **Precise droplet size distribution graph can be added in order to set the particle size and the aerosol generation flowrate as a standard value for you use case**. As a result, our Micronice T45 set up can be used as a sampling device or a calibrating aerosol generator.

6.2.3. Filter testing

In order to test air purifiers and air-filters, and assess their effectiveness (results in terms of reduction of viral or bacterial load) it is necessary to create environments that simulate real situations and bacteria/viral exposure. These tests consist in introducing a controlled concentration of viruses, bacteria, particles or other contaminant into closed chambers via precision aerosol generators.

The Micronice® T45 allows to aerosolize precise amount of bacteria, viruses, fungi, spores or other needed particles to test the efficiency of such filters. Micronice® technology and design is able to accurately spray samples of bacteria or viruses to replicate an infected environment without prior damage, so the efficiency of the air purifiers can be perfectly evaluated. The main advantages of our technology are the following :

- **Very precise amount of nebulized particles**. With no dead volume, scientists are able to control the exact amount of contaminant they spray.
- **No rise in temperature or in pressure**. The aerosol produced is very similar to ambient aerosol, no contaminant is damaged.
- **Control on the droplet size, allowing to simulate various cases.**
- **Easy to fill, set up and clean, gaining time for testing samples**.

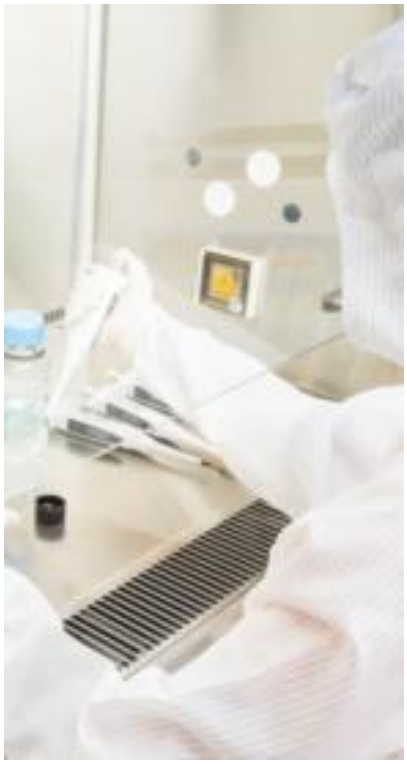

6.3. Standard dimensions

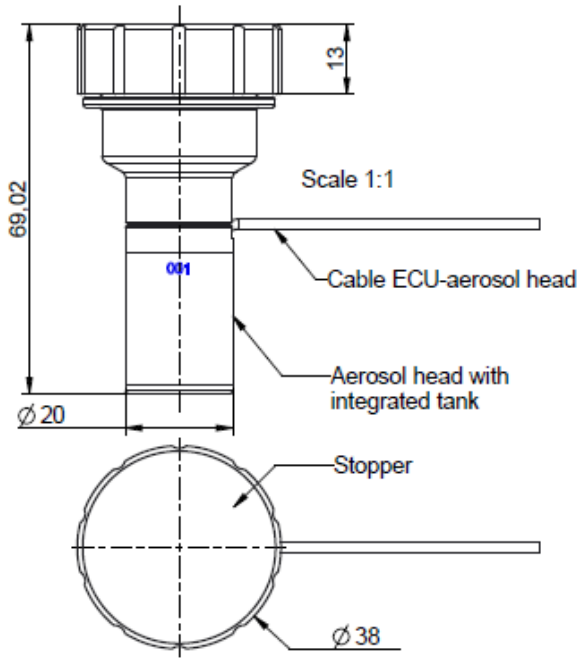

Nozzle dimension

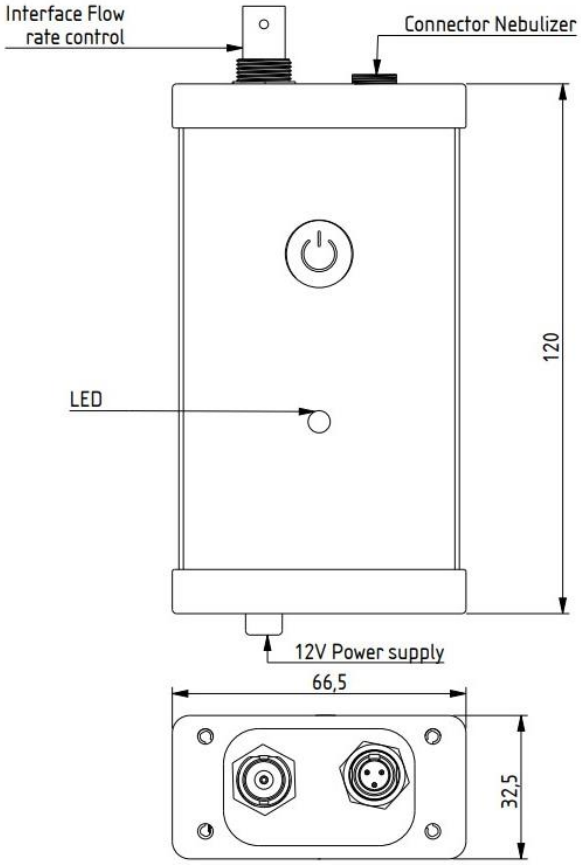

Electronic controller dimension

6.4. Specifications

6.4.1. Output

Nozzle ref	Droplet size	Max output per nozzle (ml/min) – RO water	Max output per nozzle (L/h) – RO water	Max nozzles per controller (simultaneous control)	Max output per controller/nozzles set-up
H360 – M05	05 µm	0,8 ml.mn	0,05 L.h	10 nozzles	0,5 L.h
H360 – M08	08 µm	2,5 ml.mn	0,15 L.h		1,5 L.h
H360 – M12	12 µm	4,3 ml.mn	0,26 L.h		2,6 L.h
H360 – M20	20 µm	8 ml.mn	0,5 L.h		5 L.h
H360 – M50	50 µm	35 ml.mn	2 L.h		20 L.h

Other droplet size on-demand : 24 µm, 30 µm, 39 µm, 46 µm, 65 µm. Customization of droplet size is possible. Please contact us at www.tekceleo.com.

6.4.2. Inputs

Nozzle ref	Power supply	Power consumption	Water supply system	Water supply max pressure	Control system
H360 – M05	12 VDC – 60cm standard cable length	< 160 mA per nozzle	10 mL integrated tank	0,1 bar	12 VDC power supply (adapters compatible to 110 and 220 V power supply) PWM interface (3.3V) on BNC connector
H360 – M08					
H360 – M12					
H360 – M20					
H360 – M50					

6.4.3. General characteristics

Nozzle ref	Weight (cabled nozzle)	Nozzle materials	System tubing	Temperature range	Average lifespan under normal condition of use
H360 – M05	40 g	SS304, SS316 and POM	N/A	-20°C to 80 °C Work only on liquid *-20 °C to + 200 °C version on-demand*	10 000 hours Lifespan may vary depending on liquid and condition of uses
H360 – M08					
H360 – M12					
H360 – M20					
H360 – M50					

6.5. P&S T45 fully functional kit

In order to easily use directly our Micronice technology, we provide a fully functional kit. Main purpose of this kit is to directly use our T45 aerosol generation technology.

This kit is made to be a fully functional device that can be directly use for all applicable use cases : aerosol generation, lab experiment, coating, etc.

Kit can be purchased at any time and for any droplet size or configuration needed. Just contact us on our website www.tekceleo.com.

6.5.1. Items included

<u>List of items included in the P&S T45 kit</u>

The P&S T45 functional kit includes :

- One nozzle and a tripod to mount it.
- One controller.
- One HMI to easily get started (touch-screen displayer for easy control). It allows to ON/OFF, set flowrate and duty cycle.
- All needed cables.

7. Electronic controllers

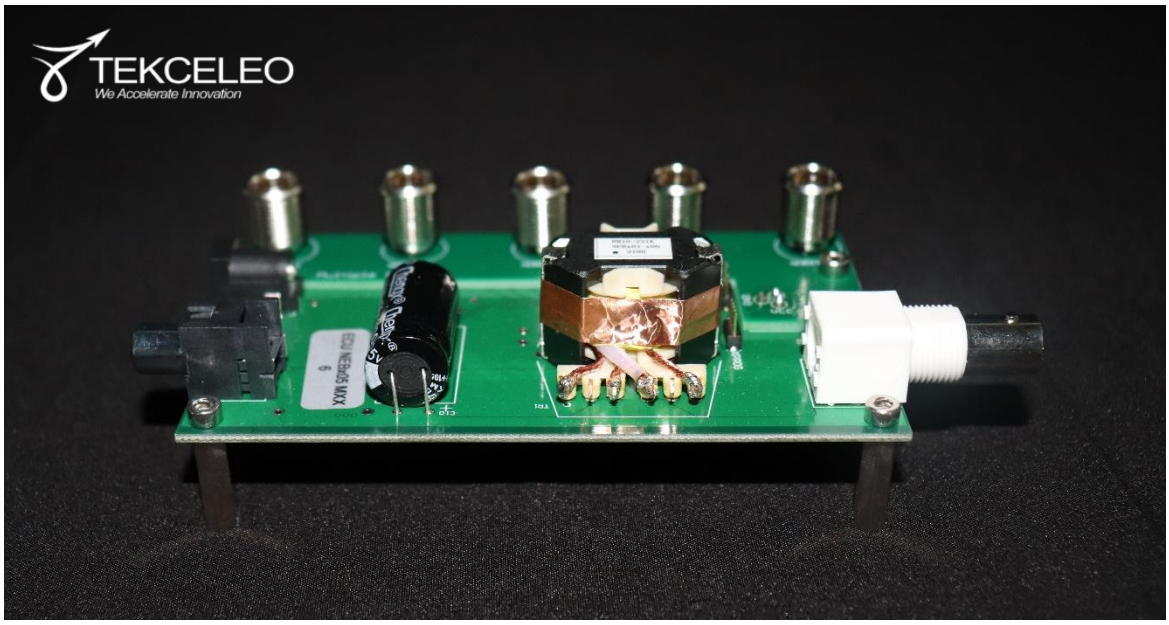

7.1. Features

Our electronic controllers work on both P&S 360 and P&S T45 nozzles. They allows for :

- Continuous operation
- PWM control of the nozzle, for ON/OFF and flowrate control
- Multiple nozzle control (simultaneous operation), from 1 to 10 nozzles

Our controllers are on different design depending on how much nozzles they are meant to control :

- ECU x1 (available with casing)
- ECU x2 (casing on-demand)
- ECU x3
- ECU x4
- ECU x5
- ECU x6
- ECU x7
- ECU x8
- ECU x9
- ECU x10

Current consumption depends on how much nozzles they are able to control. With a ratio of 60 to 160 mA per nozzle.

7.2. Specifications

	Supply voltage	Current consumption per nozzle	Dimension	PWM control
ECU Neb XX	12 Vdc	60 mA – 160 mA	120 x 66,5 x 32,5 mm	BNC connector at 3.3 V Frequency : 150 Hz

8. Customization and on-demand parts

8.1. Available customization

8.1.1. Droplet size

Droplet size	Flowrate	Availability	High temperature version	Electronic control	P&S T45 version	P&S H360 version
5 µm	0,8 ml/min	Standard	On-demand	YES	YES	YES
08 µm	3 ml/min	Standard	On-demand	YES	YES	YES
12 µm	4.5 ml/min	Standard	On-demand	YES	YES	YES
17 µm	4.5 ml/min	Standard	On-demand	YES	YES	YES
20 µm	8 ml/min	On-demand	On-demand	YES	YES	YES
24 µm	15 ml/min	On-demand	On-demand	YES	YES	YES
30 µm	20 ml/min	On-demand	On-demand	YES	YES	YES
39 µm	27,5 ml/min	On-demand	On-demand	YES	YES	YES
46 µm	35 ml/min	On-demand	On-demand	YES	YES	YES
50 µm	35 ml/min	Standard	On-demand	YES	YES	YES
65 µm	70 ml/min	On-demand	On-demand	YES	NO	YES

All droplet sizes between 03µm and 100 µm can be developed as a custom-made nozzle.

8.1.2. Temperature range

Standard design :

- -20 °C to 80 °C
- For P&S 360 and P&S T45 design.

High temperature design :

- - 20°C to 200 °C
- Only available for P&S T45 design.

8.1.3. Other

All customization can be considered upon request. Feel free to contact us as www.tekceleo.com.

8.2. Cables matrix

All our nozzle design has the same cable and connectors. Connectors can be changed upon request.

Ref	Connector Housing	Length
Standard nozzle cable	Mini-XLR female	60 cm
1m cable extension (nozzle)	Mini-XLR male to female	1 m
2,5m cable extension (nozzle)	Mini-XLR male to female	2,5 m
5m cable extension (nozzle)	Mini-XLR male to female	5 m
HMI – ECU BNC (PWM)	Coaxial cable with male BNC connector	50 cm
ECU power supply	12 V 2A - DC tip size: 5.5*2.1mm	80 cm
HMI power supply	12 V 2A - DC tip size: 5.5*2.1mm	80 cm

8.3. Accessories

8.3.1. HMI

- All droplet size are compatible with the HMI
- Control function:
  - Real-time user guide on interface
  - Flow variation from 1% to 100%
  - On / off timer with number of cycles: Programmable with x second on and y second off
  - Timer with one cycle: Programmable with x second on
  - Integrated pump control

HMI P&S MXX PLUG&SPRAY	
Power supply: 12VDC	
Power consumption: 12VDC/150mA	
Touch Interface: 3.5 inch	
Power supply to HMI cable length: 80 cm	
Cable lengths HMI to electronic box: 50 cm	
HMI P&S MXX Control features	
Nebulizer and Pump	Touch On / Off
Flow Rate	Variation from 1% to 100% touch
On/Off Cycle	Choice of x second on and x second off with a defined number of cycles (by multiple of one second)
On Cycle	Choice of x second on under a single cycle (by multiple of one second)

HMI P&S MXX
Dimensions : 136x84x44.2mm

RCA Cable :50cm

BNC

12V Power Supply : 80 cm

DC-DC :50cm

8.3.2. Pump and ECU pump

To easily get started with a circulating fluidic system we provide a pump and its controller already designed for our P&S 360 design nozzles. The pump used is a peristaltic pump.

Peristaltic Pump specifications:

- Flow Rate: 155 ml/min
- Current Consumption: 0.5 A
- Supply Voltage: 12V

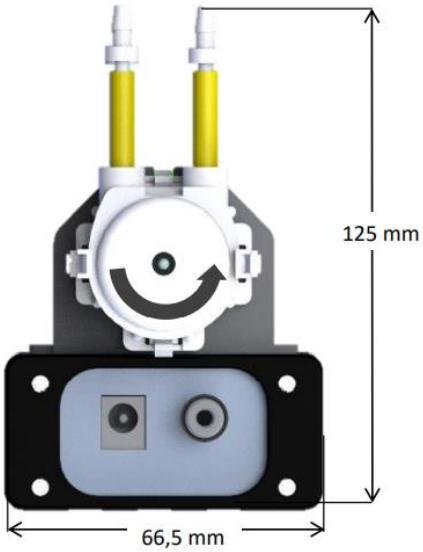

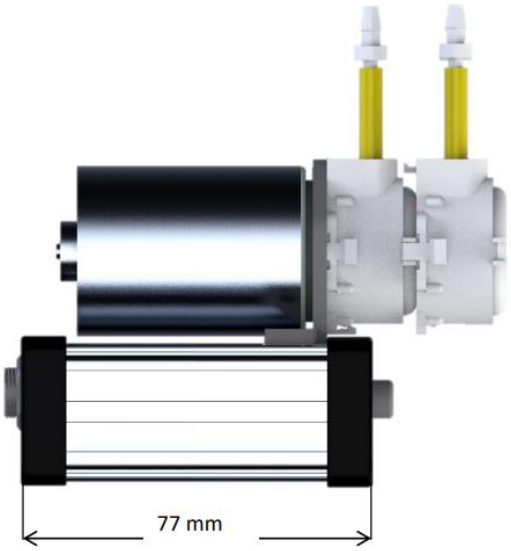

8.3.3. Other

Tekceleo can provide guidance and/or supply for all other needed component for your set-up :

- Fluidic system parts :
  - Tubing
  - Pump
  - Holding parts
  - Flowrate regulators
- Electronics :
  - Cables
  - Connectors
  - Controllers

Feel free to contact us and we'll gladly help you find the solution you need ! www.tekceleo.com

Contact us at :

www.tekceleo.com